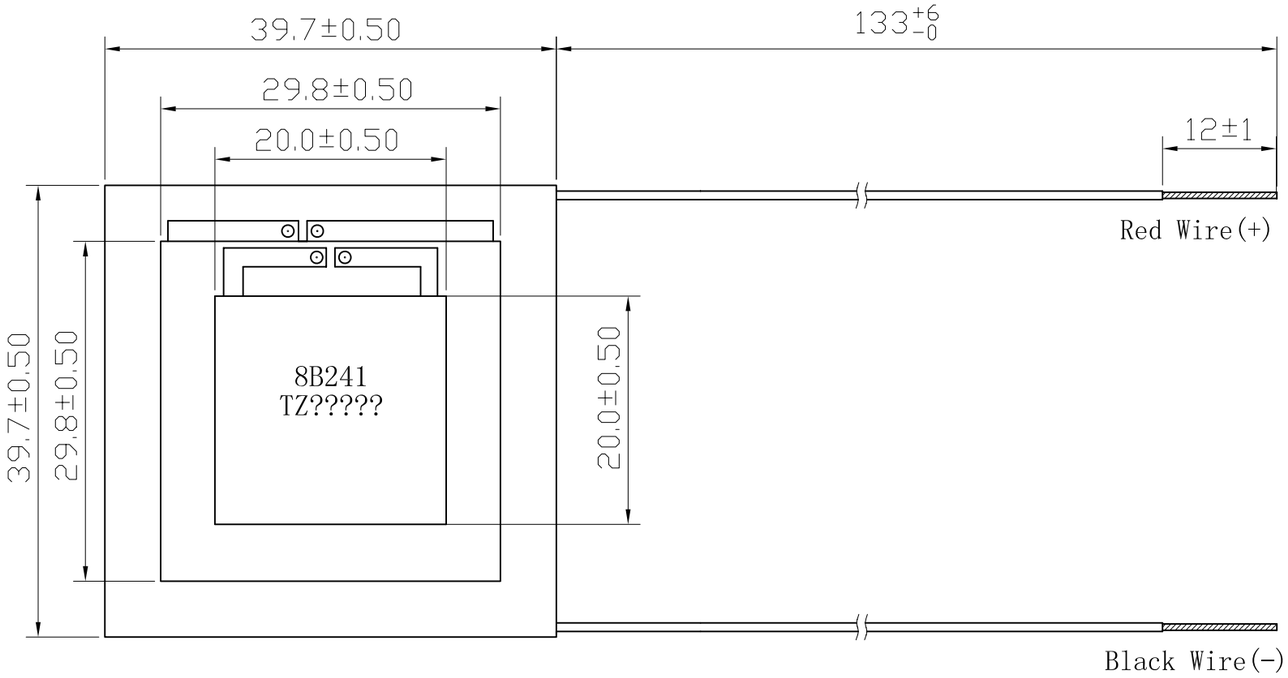

FERROTEC CONFIDENTIAL

1). The resistance of the module shall be within 2.424 to 2.962 ohms at an ambient temperature of 25 degrees Celsius.
2). Material of lead wires: #20 AWG Type-E Teflon MIL-W-16878E/4.
3). The end of the lead wires shall be pre-tinned.
4). Part Number and Lot Number should be stamped on the cold side with Black color.

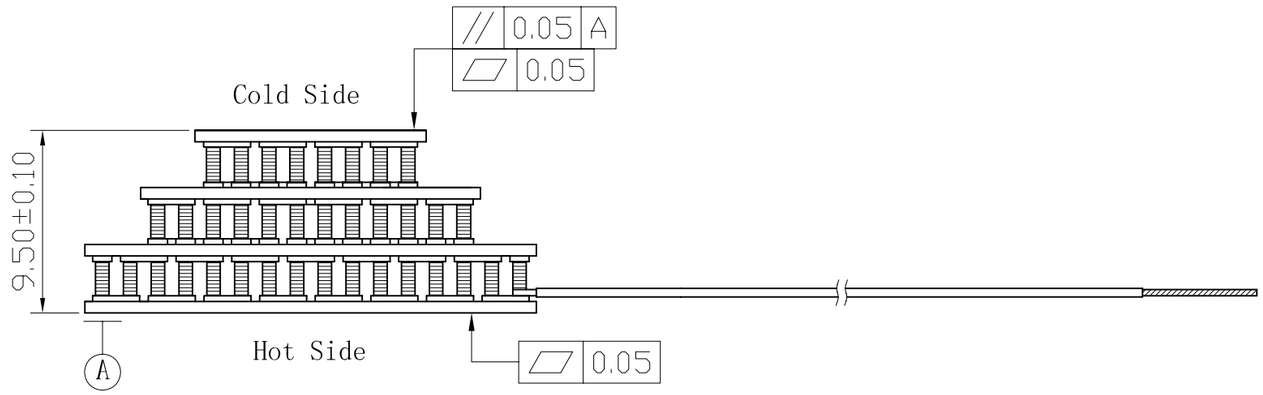

ROHS COMPLIANCE

Item	Value	Conditions
Imax	4.5A	Qc=0, DT=DTmax, Th=50℃
Vmax	16.4V	Qc=0, I=Imax, Th=50℃
DTmax	111℃	Qc=0, I=Imax, Th=50℃
Qcmax	18W	I=Imax, DT=0, Th=50℃
Thmax	200℃	Maximum Processing Temperature

FerroTec

General Dimension Tolerance			
Process / Size Range	Cutting		Forging
	Common	Special	Common
less than 6	±0.1	±0.15	±0.5
6 up to 30	±0.2		
30 up to 120	±0.3	±0.2	±0.7
120 up to 315	±0.5	±0.25	±1.0
315 up to 1000	±0.8	±0.4	±1.5
Angel	±5°	±1°	±5°

PLs	Date	Summary Of Modification	By

Designed	Fangliang Hou	2014/4/6	Finished Mark
Checked	Yongqing Wu	2014/4/6	Material
FTH Approved			Finish
FT Approved			Raw Material Size
FTU Approved			Raw Material Weight

Title: 2030/228/045B		Proj. 3 Angle
Drawing Number: T1404-XX00E		1/1
P/N: 8B241	Scale: Do Not Scale	Rev. Z