# FERROTEC CONFIDENTIAL

## ROHS COMPLIANCE

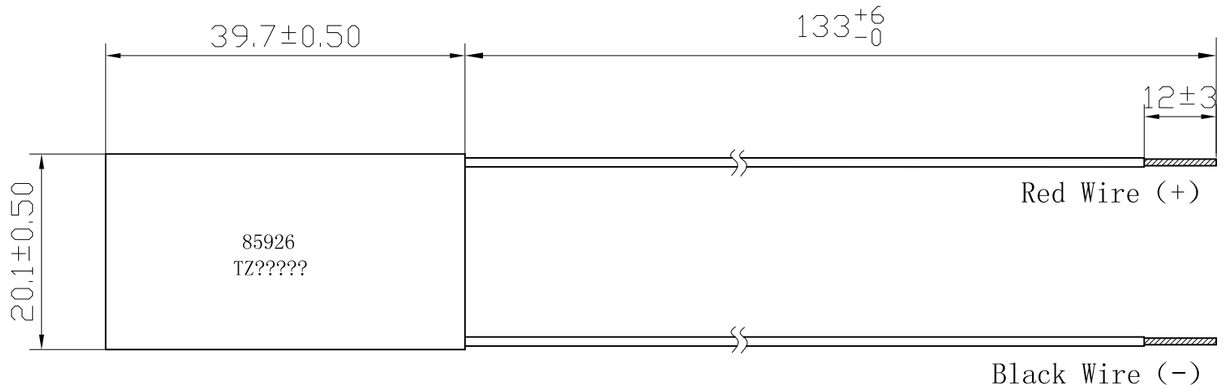


1)The resistance of the module shall be within 1.438 to 1.753 ohms at an ambient temperature of 25 degrees Celsius.
2)Material of lead wires: #24 AWG Type-E Teflon MIL-W-16878E/4.
3)The end of the lead wires is pre-tinned.
4)Lot Number and Part Number shall be stamped on the cold side with black color.
△1 5) Max process temperature 200℃。

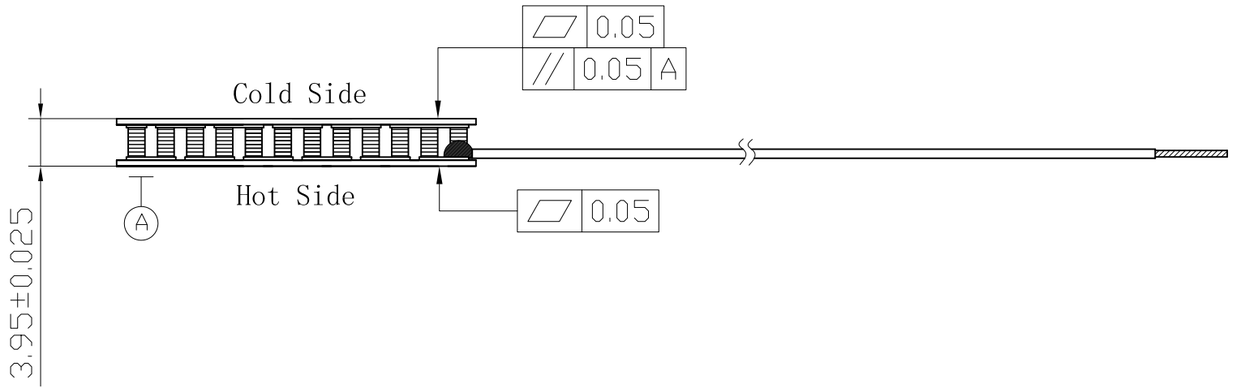


| | Item | Value | Test Conditions |
|---|---|---|---|
| | Imax | 4.0A | Qc=0, DT=DTmax, Th=50℃ |
| △1 | Vmax | 9.0V | Qc=0, I=Imax, Th=50℃ |
| △1 | DTmax | 83℃ | Qc=0, I=Imax, Th=50℃ |
| △1 | Qcmax | 19W | I=Imax, DT=0, Th=50℃ |

FerroTec

| General Dimension Tolerance | | | |
|---|---|---|---|
| Process / Size Range | Cutting Common | Cutting Special | Forging Common |
| less than 6 | ±0.1 | ±0.15 | ±0.5 |
| 6 up to 30 | ±0.2 | | |
| 30 up to 120 | ±0.3 | ±0.2 | ±0.7 |
| 120 up to 315 | ±0.5 | ±0.25 | ±1.0 |
| 315 up to 1000 | ±0.8 | ±0.4 | ±1.5 |
| Angel | ±5° | ±1° | ±5° |

| △ | PLs | Date | Summary Of Modification | By |
|---|---|---|---|---|
| 1 | 4 | 2014/6/23 | Change parameters | Mei Yang |

| | | | |
|---|---|---|---|
| Designed | Jiejian Lu | 13.3.26 | Finished Mark |
| Checked | Yongqin Wu | 13.3.26 | Material |
| FTH Approved | | | Finish |
| FT Approved | | | Raw Material Size |
| FTU Approved | | | Raw Material Weight |

| | | | |
|---|---|---|---|
| Title | 20015/063/040B | | Proj. 3 Angle |
| Drawing Number | T1303-1900E | | 1/1 |
| P/N | 85926 | Scale: Do Not Scale | Rev. A |